FIELD MOUNTED TEMPERATURE TRANSMITTER WITH DISPLAY T-1000

Explosion Proof
CLASS I, GROUPS A, B, C & D,
CLASS II, GROUPS E, F & G
NEMA 4X

Technical Data

Enclosure housing: Aluminum or SS316
Input: Programmable for thermocouple type K, J, R, S, T, N, E, B and RTD pt 100Ω from a PC
Working span range: Programmable from a PC
LCD display: 4 ½ digital
Output: Linearized 4 to 20mA or 20 to 4 mA; Hart type on request
Accuracy: pt 100Ω and 0 to 50mV ±0.15% full scale
Thermocouple ±0.25% full scale
Ambient temperature: -40 to +85°C (-40 to 185°F)
Power supply: 12 to 35 VDC
Sensor failure protection: Programmable burnout upscale or downscale
Sensor connection: ½", ¾" available
Conduit connection: ¾"NPT Female

Range Table

Sensor Type	Range	Minimum Measurement Span
Thermocouple K	-150 to 1370°C	100°C
Thermocouple J	-100 to 760°C	100°C
Thermocouple R	-50 to 1760°C	400°C
Thermocouple S	-50 to 1760°C	400°C
Thermocouple T	-160 to 400°C	100°C
Thermocouple N	-270 to 1300°C	100°C
Thermocouple E	-90 to 720°C	100°C
Thermocouple B	500 to 1820°C	400°C
PT100	-200 to 600°C	40°C
Voltage	0 to 50mV	5mV

Dimensions

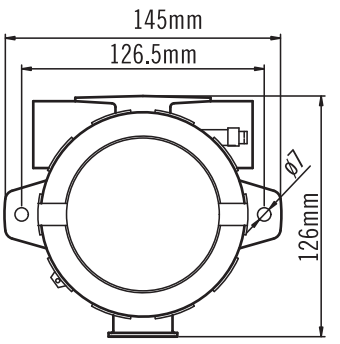

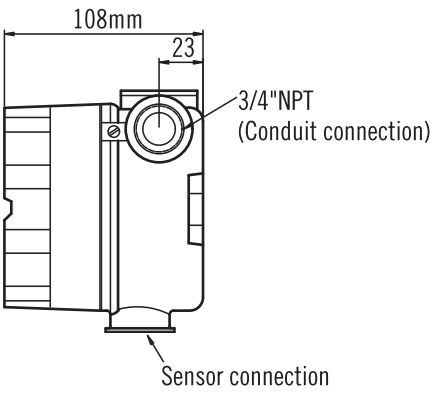

Ordering Information

T1000	Code	Sensor Type
		(1) K (2) J (3) R (4) S (5) T (6) N (7) E (8) B (9) PT100 (10) Voltage

Code	Measuring Range
	Please fill in the requested measurement range.

Code	Output		
A	4~20 mA	B	20~4 mA
C	Hart type 4~20 mA	D	Hart type 20~4 mA

Code	Sensor Connection
	(A) ½"NPT (B) ¾"NPT (O) option

T1000					Complete Ordering Code

WWW NEW-FLOW COM • TEL: 886-7-8135500 • FAX: 886-7-8225588 • Email: info@new-flow com